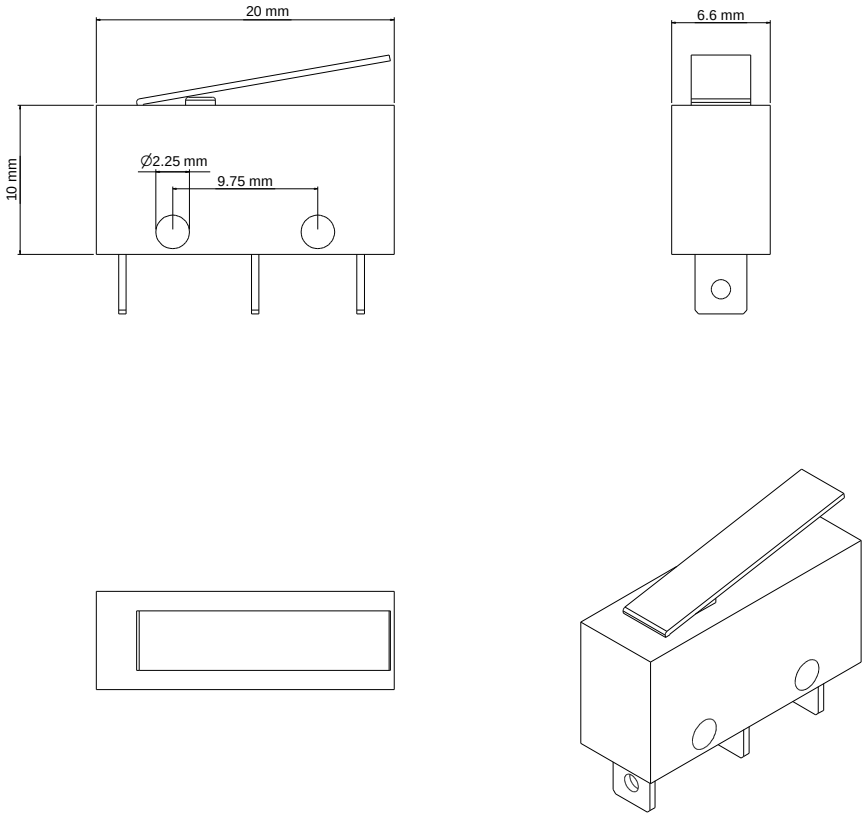
20 mm
6.6 mm
10 mm
∅2.25 mm
9.75 mm