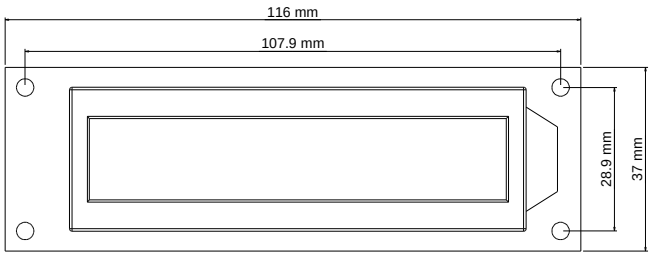
116 mm
107.9 mm
28.9 mm
37 mm

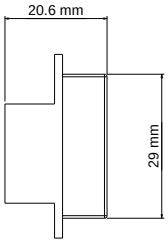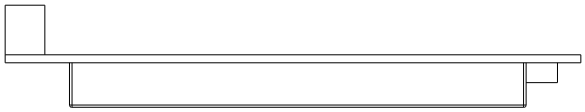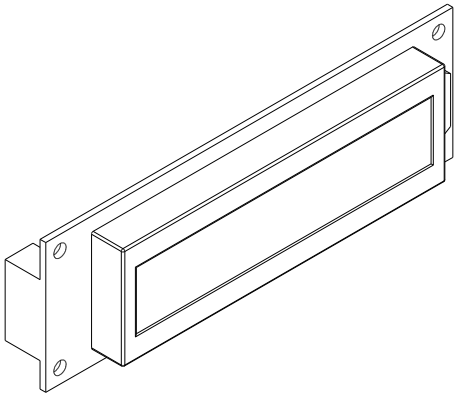
20.6 mm
29 mm